SPI™ livestock WATERERS

Exploded View

VS20E

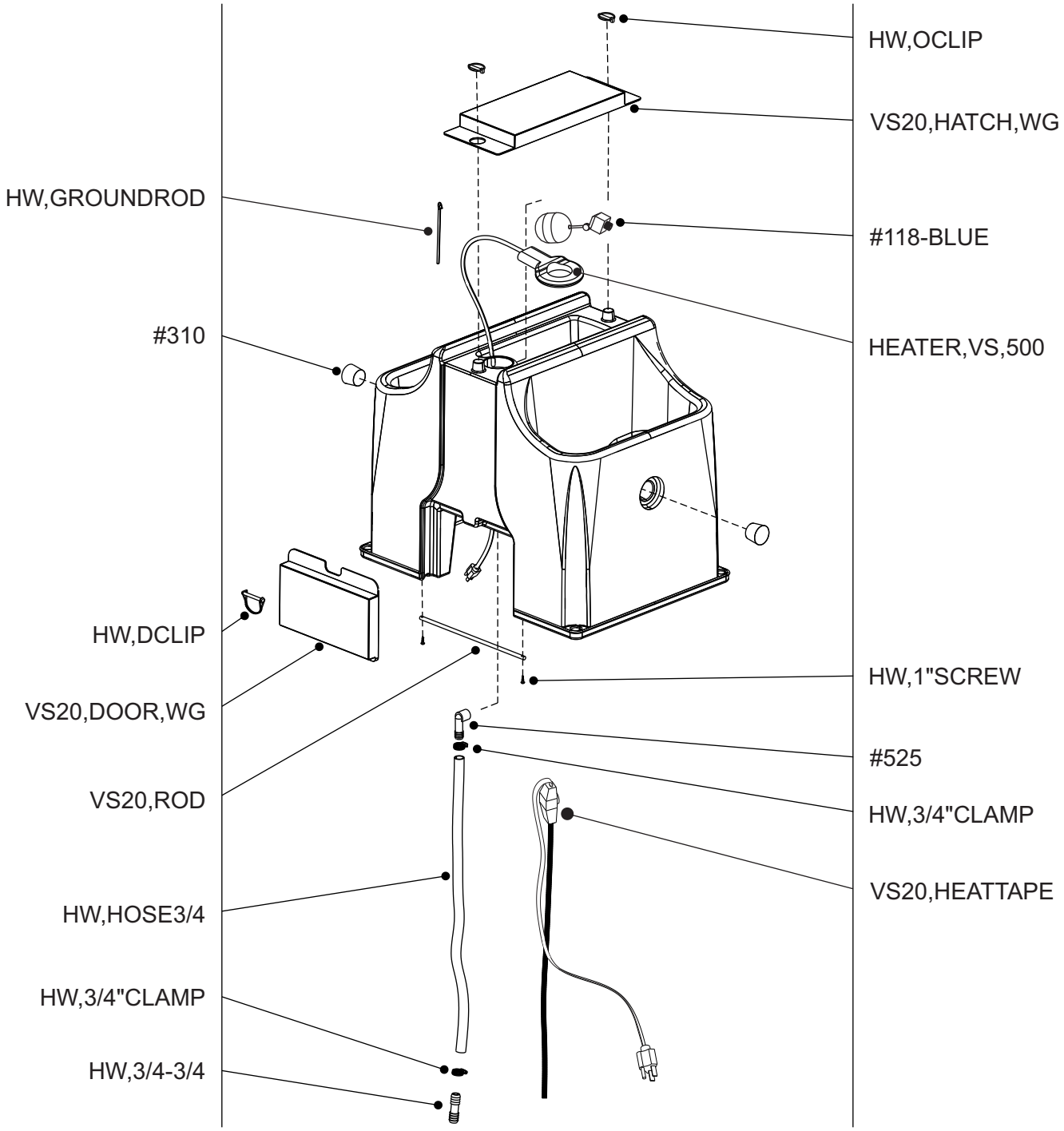

Copyright © 2006 - 2021
SPI Plastics Inc. All rights reserved
Printed in Canada

Updated: May 2021

165 Stoneman Drive, Box 100
Shallow Lake, ON N0H 2K0 Canada

[T] 800-269-6533 or 519-935-2211
[F] 519-935-2174

spi@spiplastics.com
www.spiplastics.com