livestock Waterers

Exploded View

Model VS20E

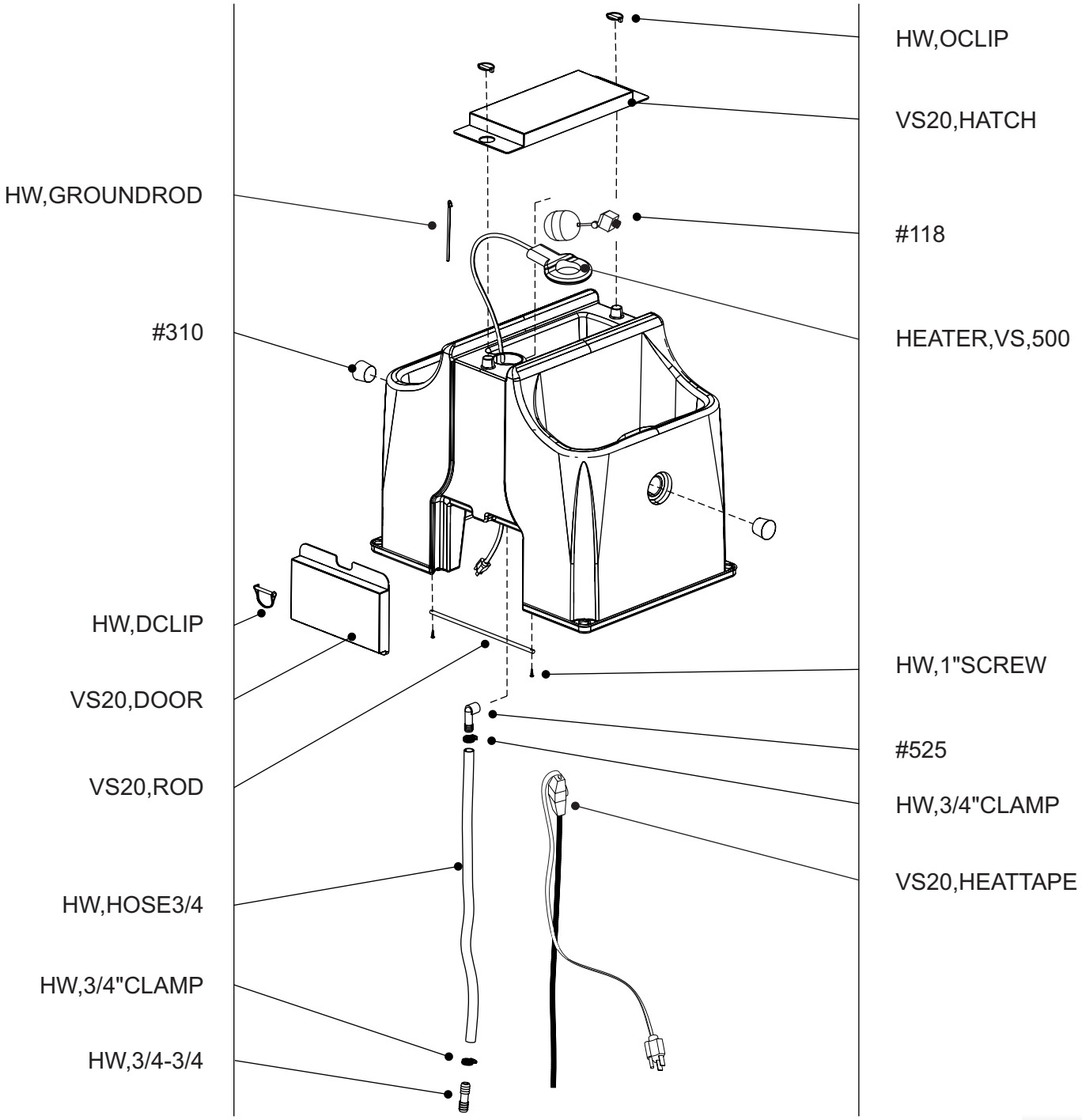

Copyright © 2006 - 2011
SPI Industries Inc. All rights reserved
Printed in Canada

Updated: November 9, 2011

Box 100, R.R.#2
Shallow Lake, ON N0H 2K0 Canada

Tel: 800-269-6533 or 519-935-2211
Fax: 519-935-2174

Email: spi@spiplastics.com
Web: www.spiplastics.com